جامعة القاهرة كلية الهندسة
قسم هندسة القوى الميكانيكية
معمل التحكم الأوتوماتيكى

ACC Virtual Labs
Automatic Control Circuits & Virtual Labs for Mechanical Power Systems
معمل التحكم الأوتوماتيكى و المعامل الإفتراضية لأنظمة القوى الميكانيكية

MEP 480 B. Sc. Design Project- Year 2008/2009

Practical Applications of PLC & Stepper Motor in Automatic Control Process

Supervised by Prof. Ashrif Sabry, MEP Chairman and Dr. Mohsen Sayed Soliman , ACC Manager
Mechanical Power Engineering Department

Abstract:

An automated moving belt is used for transferring objects needed to be filled like tanks, cups, jars ...etc. The belt is moved by a stepper motor connected to the belt shaft. The stepper motor rotates with a certain speed with a certain steps which can be counted for the required length. The stepper motor is connected with an electronic board which supplies the motor with the required voltage and current needed for rotation. The electronic board is connected with a programmable device called PLC [Programmable logic controller] that gives the board a pulse train needed for the electronic board. An inductive sensor is used to sense the transferring objects. The sensor gives a signal input to the PLC. Sensing the object the belt starts to move with a certain length to the needed position under a solenoid valve "presented as a led" connected with a tank filled with required liquid. The solenoid valve has a signal given to it from PLC to open. Then the object starts to be filled with required liquid. A pump "presented as a led" is used to fill that tank each time with liquid. That pump has a signal to run from the PLC too.

The layout legend:

Position (A): The start of the object needed to be filled. The sensor gives a signal to the PLC to rotate the motor when sensing the object.

Position (B): is the where the motor stops under the solenoid valve for a certain time required for filling the object then the motor rotates once again to reach to Position (C).

An illustrating arrow.	
An input signal to the PLC	
An output signal from the PLC	
The liquid flow way.	
An electric current to the stepper motor from the electronic board required for rotation.	

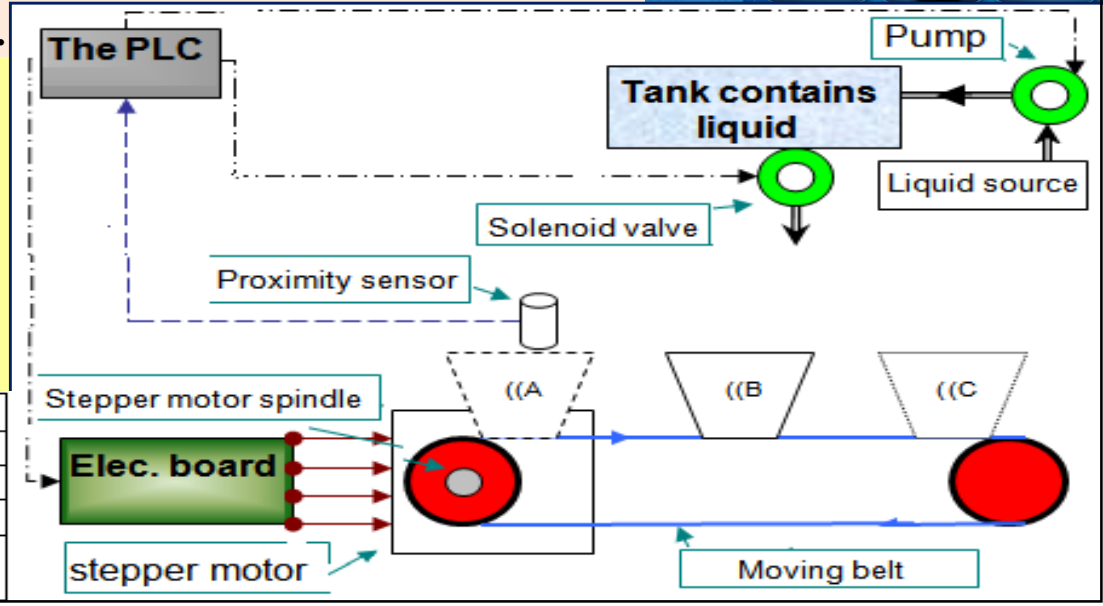

Adding a pump:

In our project we placed a lid of instead of the pump to that the signal is coming out, so any future upgrade for the project may take in consideration installing a pump.

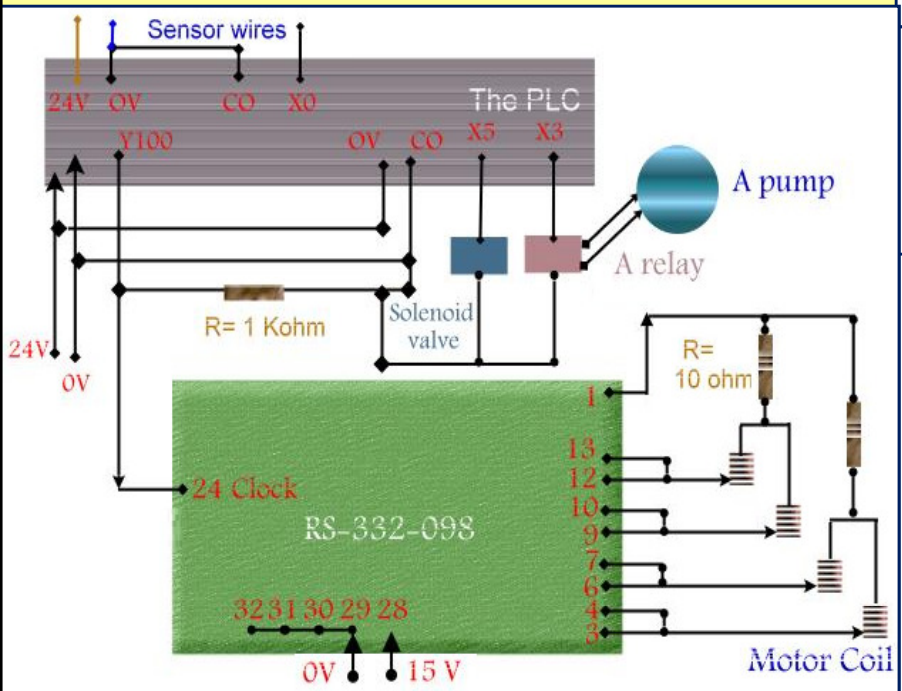

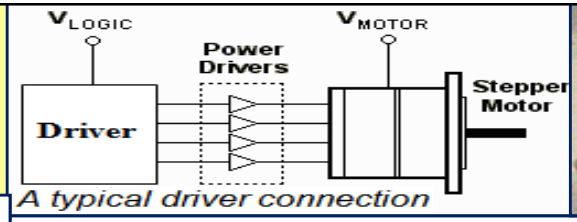

A typical driver connection

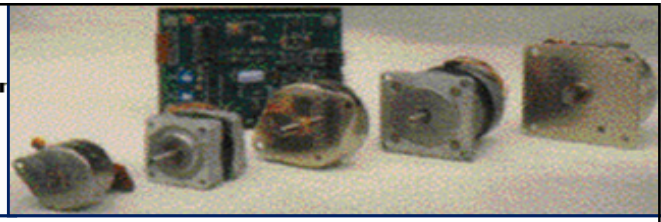

A Stepping Motor System consists of three basic elements, often combined with some type of user interface (Host Computer, PLC or Dumb Terminal):

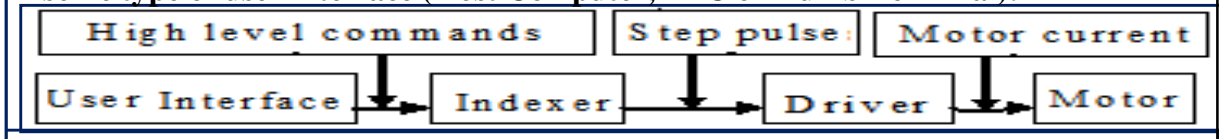

The Indexer (or Controller) is a microprocessor capable of generating step pulses and direction signals for the driver. In addition, the indexer is typically required to perform many other sophisticated command functions. "In the case of this project it is a PLC controlling unit".The Driver converts the indexer command signals into the power necessary to energize the motor windings. There are numerous types of drivers, with different current/amperage ratings and construction technology. Not all drivers are suitable to run all motors, so when designing a Motion Control System the driver selection process is critical. "In our case it's the electronic board"The Step Motor is an electromagnetic device that converts digital pulses into mechanical shaft rotation. Advantages of step motors are low cost, high reliability, high torque at low speeds and a simple, rugged construction that operates in almost any environment. The main disadvantages in using a step motor is the resonance effect often exhibited at low speeds and decreasing torque with increasing speed.

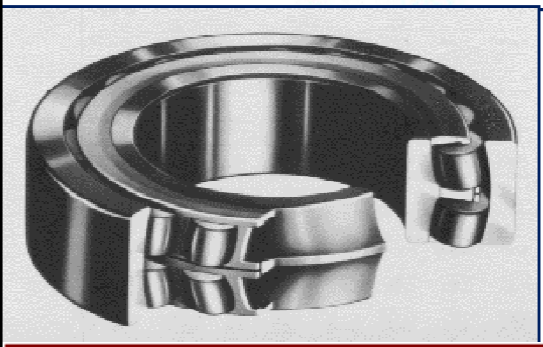

This figure shows the shaft slipped into the bearing.

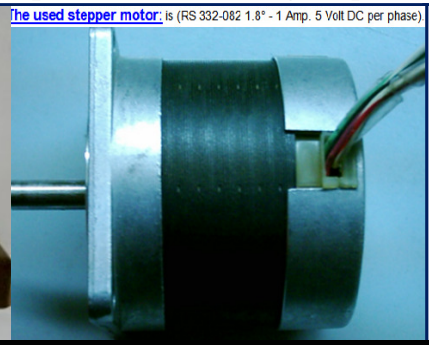

The used stepper motor: is (RS 332-082 1.8° - 1 Amp. 5 Volt DC per phase).

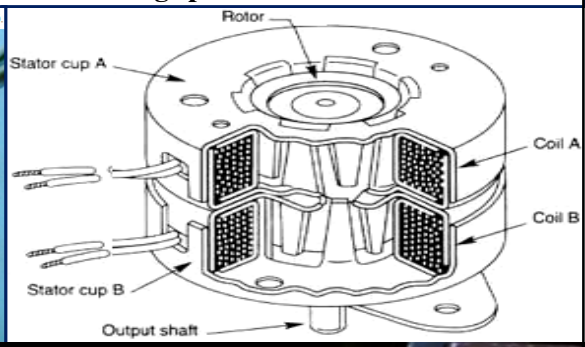

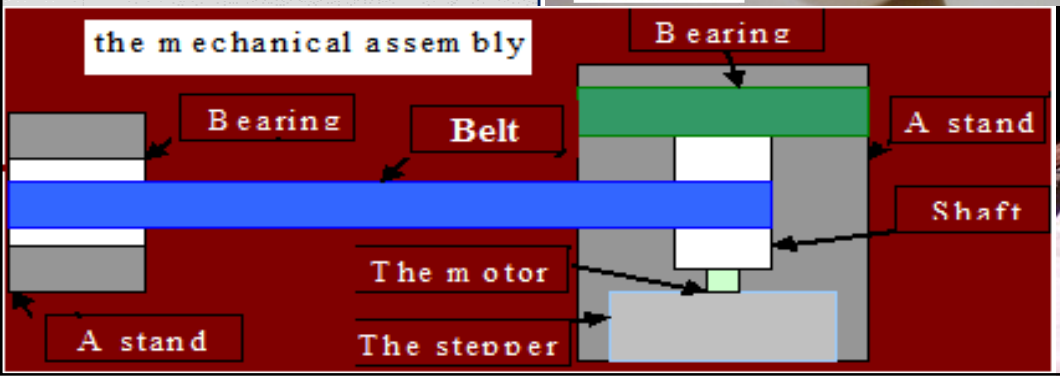

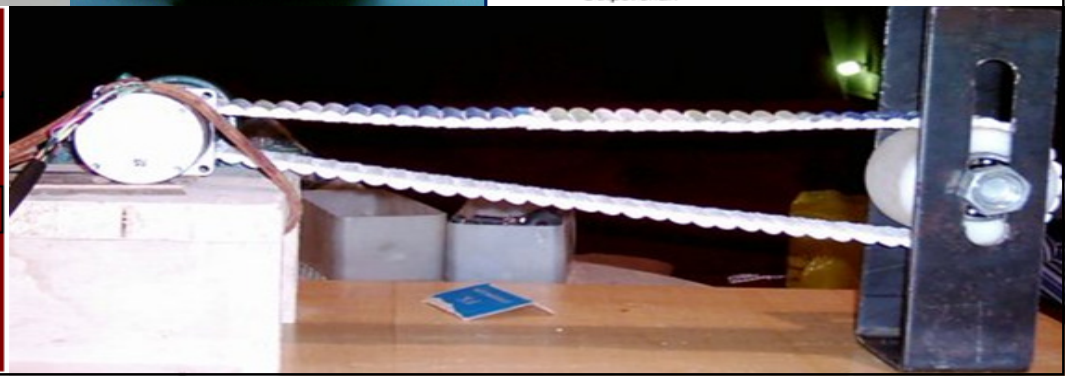

The used PLC in the project: Hitachi EH-14DTP 24 VOLT DC

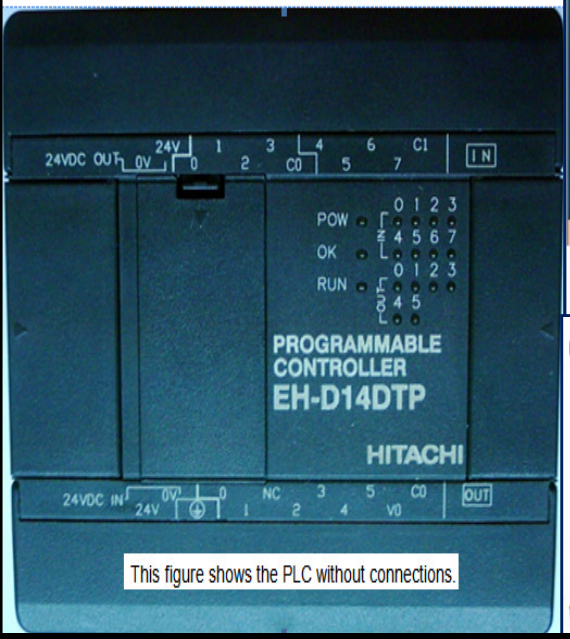

This figure shows the PLC without connections.

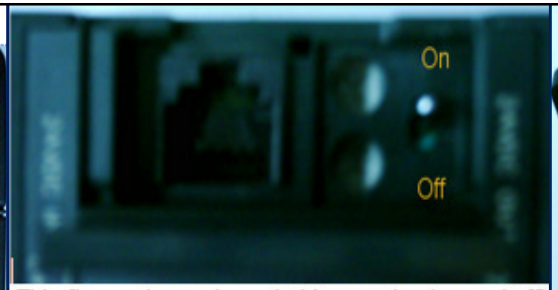

This figure shows the switching modes (on and off) of the PLC and computer connection.

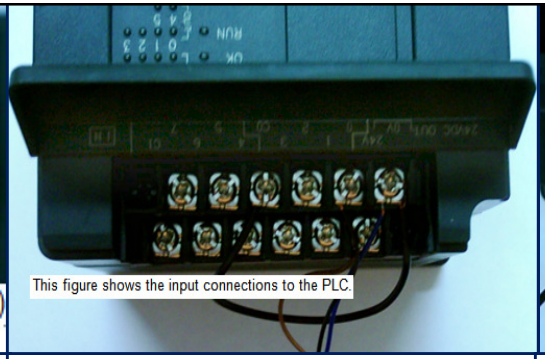
This figure shows the input connections to the PLC.

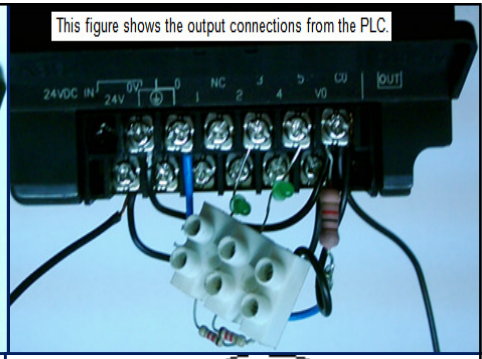
This figure shows the output connections from the PLC.

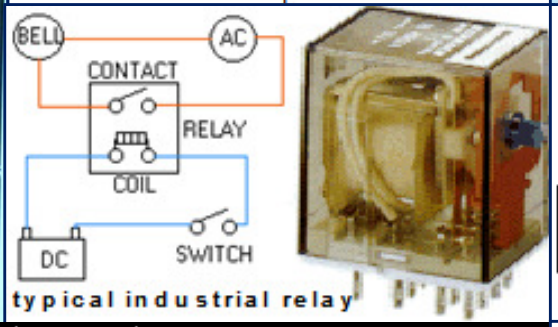

typical industrial relay

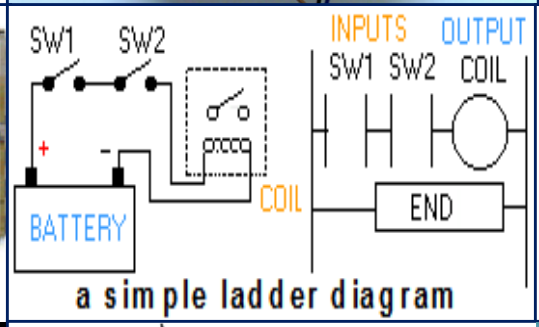

a simple ladder diagram

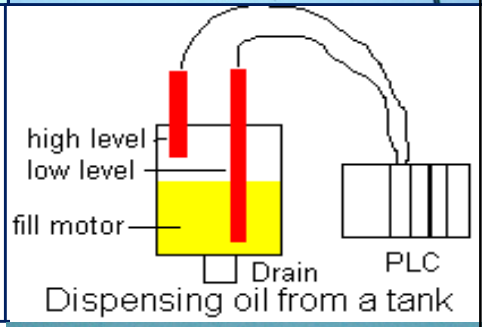

Dispensing oil from a tank

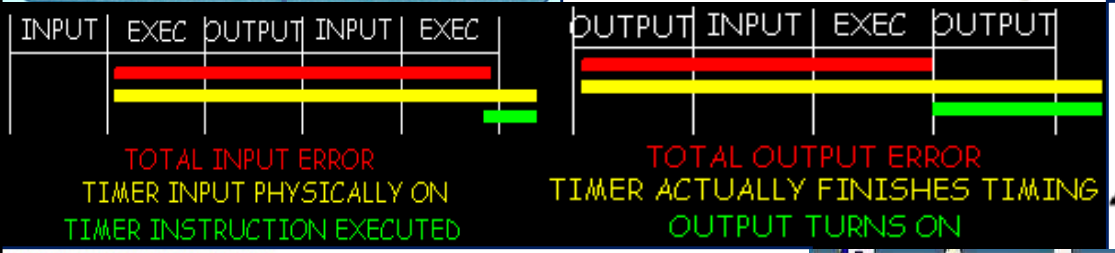


Shift Registers

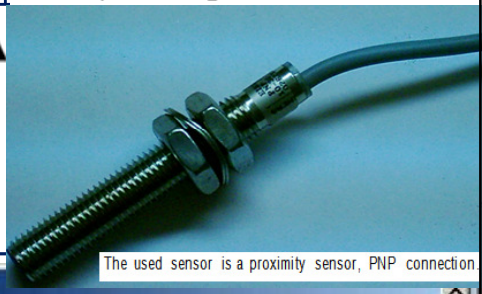
The used sensor is a proximity sensor, PNP connection.

4.2 The used software

The used program is **Actwin** version 3.30 – IEC 1131-3 Programming and developing software. Copy right © 1995-2000 **Actwin** AB. This copy of **Actwin** is licensed to **Cairo University**.This copy is presented from **Shaker consultancy groups, CONSIS,** to **DR. Ashraf Sabry and DR. Mohsen Solieman.**

How to write a program using Actwin?

1st step: we install the program from the Actwin directory\install.exe as follows:

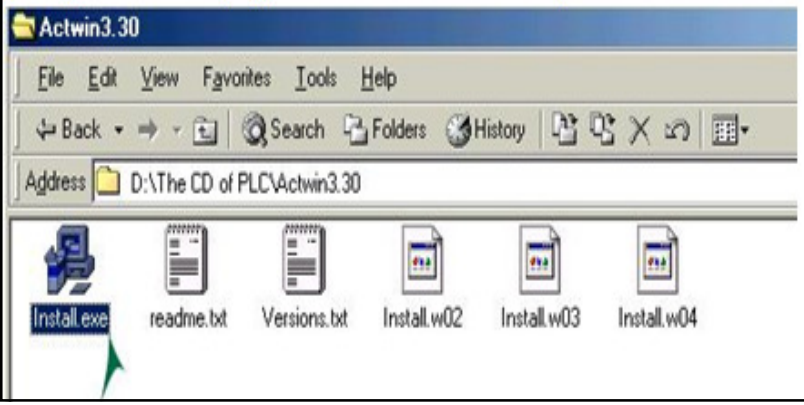

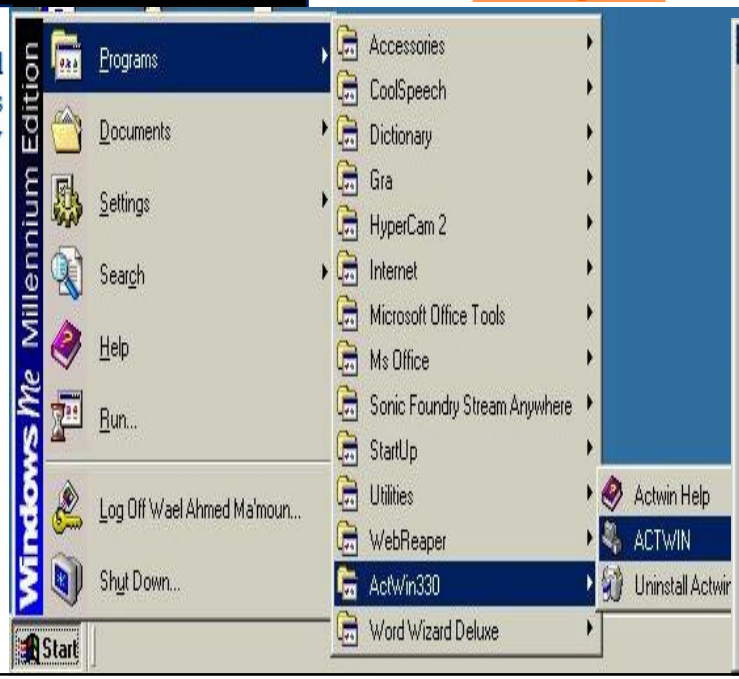

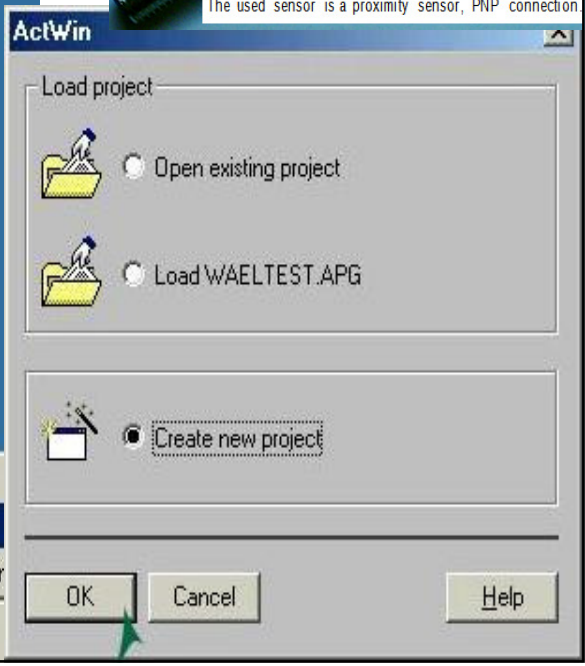

Project financial and economics.

5.1 The cost of the project:

Type of parts	Parts	Used parts cost L.E	Wasted parts cost L.E
Mechanical	Belts	37.5	24
	Bearing	53	0
	Screws	13	0
	Shaft	20	0
	Belt supports	22.5	0
	Testing board	0	30
	Supporting board	250	0
Electrical	The PLC	1400	0
	Power supplies	213.5	150
	Resistances	8	4
	Sensor	300	0
	Heat sink	8.5	0
	Solenoid valve	300	0
	Stepper motor	A gift from C.U.F.E.	0
TOTAL		2626	208

An economical ways to make the same project.

Replacing the stepper motor with a DC motor:

A DC motor can do the same job in this project, but it has its advantages and disadvantages like anything in the world.

The DC motor advantages:

1- Cheaper than a stepper motor
2- Easily connecting.
3- Easily maintenance.
4- Can be positioned by using a servo-motor.
5- High torque at high speeds.

The DC motor disadvantages:

1- Difficult positioning.
2- The armature doesn't stop immediately.
3- Although it has a gradual acceleration and deceleration curves but it still overshooting.
4- To position it we use a servo motor but Servos usually implement a small DC motor, a feedback mechanism (usually a potentiometer with attached to the shaft by gearing or other means), and a control circuit which compares the position of the motor with the desired position, and moves the motor accordingly. This can get fairly complex and expensive for most hobby applications.
5- Freely running doesn't have a holding torque.
6- Low torque at low speeds without gearing mechanism.
7- To vary the speed of the DC motor it needs extra components which increases the money paid.

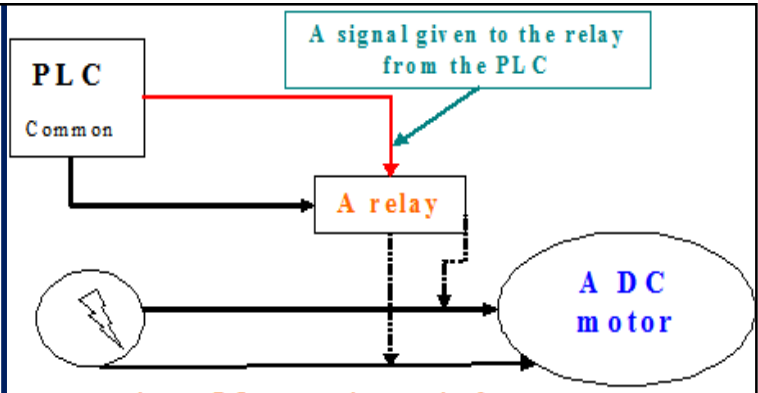

connecting a DC motor instead of a stepper motor

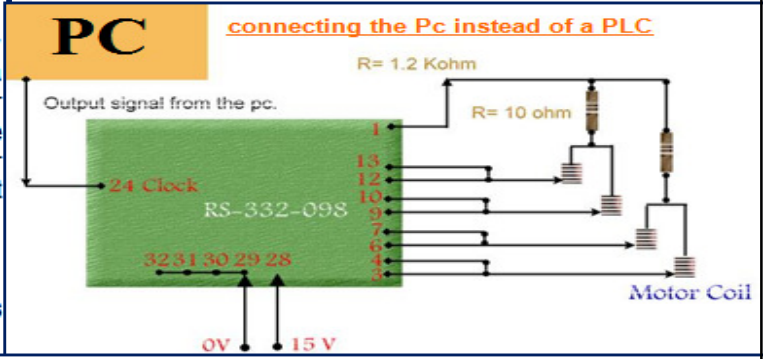

2- Replacing the PLC with a Pc:

A personal computer can be used instead of a PLC, it does the same purpose. But in this project we are showing methods of controlling the stepper motor. Last year project they used a Pc but this year to vary the ways of controlling and signal processing we used a PLC.

The PLC advantages:

1- It has many inputs and outputs more than a Pc
2- Ability of connection more than a PLC at the same time.
3- Easily programming.
4- Ability of updating program while running.
5- Ability of changing the whole program easily.
6- The PLCs has many ranges.
7- High reliability
8- Ability of monitoring the running process.
9- A compact size.
10-Can be used in lots of processes.
11-Ability of timing and counting processes better than a Pc.

The PLC disadvantages:

1- Very expensive, while any cheap Pc can be used.
2- Needs a Pc to program it.
3- Maintenance is not easy.
4- Needs a well trained people to deal with.
5- Very sensitive.
6- Not any PLC type can produce a pulse train output.

Problems and troubleshooting.

Electrical problems:

First of all we had a trouble in the resistance connecting the motor with the board, we did the right calculations that were given with the board data, the resistance that we first used was getting hot and at the end they melted. So we recalculated the formulas again and we where right, we asked for help from the Doctor Mohsen Seliman and he told us that it was a common problem from last year project. For this problem we used the same resistance but we increased the power of the resistances.For the new resistance we had a trouble getting it and we had a lot of time searching for it in the market.

The new resistances where having the same problem as before, but the heat was less so we got a heat sink and placed it on the hot resistance.We wanted to install a solenoid valve on our project but we faced a problem with the valve which required a 2.5 bar pressure to open and make the water flow.For installing the solenoid we found out that the volt given from the power supply was not enough so we had to design and make our own power supply so we got the entire needed component. The new power supply gave us 24 volt and 1 amp.

Electrical troubleshooting:

When the power is connected and the motor is not operating you should check the wire connection between the PLC and MOTOR BOARD (Y100 connected with 24 connection in the electronic board (clock)), if the problem persists you can check the motor wires which can be disconnected.If the power connected and the lid of the PLC is not on then check the power supply output wires to the PLC which can be loosened.If the motor shaft easily rotated with our hand then the power did not reach the motor. For this problem check the power supply to the board or Y100 connection with 24 connection (clock).

Mechanical problems:

The belt was not rotating around the motor shaft and the other side it was slipping around the shaft so we applied silicone on the motor shaft and the other pulley.We faced a problem with mounting the motor on the table because we wanted to make sure that the motor is not moving from its position. We used a belt to solve this problem.